Fliptop®
www.fliptop.se

Slider

Safety and Assembly instructions

2020
Edition 1.2

www.fliptop.se
info@fliptop.se

Thank you for purchasing a Fliptop Slider.
This document includes assembly instructions for the Fliptop Slider system. There are variants depending on length, width and number of arches.

In case of uncertainty or questions, we or the reseller would be happy to provide you with support.

Important

Transport damage must be reported to the carrier. It is important to check the packaging when the goods arrive, if it is damaged, a notification must be made to the driver at the time of delivery. It is the carrier that is responsible for damage that occurs on the goods during transport. The mounting must be done according to the mounting instructions for the material warranty to apply.

Warranty

There is a 1 year material and function guarantee from us. For the warranty to apply, the product must be mounted according to our instructions.

Safety

The safety instructions must be read carefully before using the Fliptop Slider, as moving parts move with the help of electric motor or manual power, without knowledge, serious personal injury and damage to the system can occur.

Read the manual carefully!

Table of contents

Operating instructions for Fliptop Slider

General information

Fliptop Slider is a roof system to cover mainly tipper trucks and containers. Consisting of a number of arches joined by a steel wire and covered by PVC cloth. The Fliptop Slider is opened and closed manually, or with an electric motor. Fliptop Slider is mainly intended for the coverage of tipper trucks and containers. This however does not exclude other uses.

Operating instructions

Read this documentation and familiarize yourself with the equipment before use. Fliptop Slider is powered by electric motor 24V DC or a manual crank. The motor-driven alternative is controlled by a remote control and/or buttons on the electrical cabinet. The manual option is operated with a crank.

Opening and closing the Fliptop Slider Manual (802-002)

The roof opens and closes with a crank that sits on the drive beam. To be able to crank, push the crank out of the backrest.

Opening and closing of Fliptop Slider with electrical motor (802-003)
To operate the sliding roof the main switch must be turned on. The roof is opened or closed by remote or with push buttons on the electrical cabinet, normally the truck must be connected, or an extern 24V battery is needed to operate the roof.
Fliptop Slider uses a power card that senses the power consumption, when the roof comes to a stop, the power card senses the load and breaks the power. You can't start in the same direction as the power card cut the power, you can only move the roof system in the opposite direction in this case. The power card inside the electrical cabinet is preprogrammed. Should the roof stop earlier, please check that the load does not reach the platform edge, or lies against the Fliptop Slider System.

Automatic start with Time relay
Slider has a time relay which **can be switched on**, this then opens the roof when tilting or when opening the back door, so that the Slider will not be crushed by the tailgate/ tailboard. Operation of the tailgate and when tipping should always be supervised to be able to cancel if something unexpected should happen. **The manufacturer accepts no liability for damage that occurs if the time relay or other technology would not operate the slider system during tipping or opening.**

The remote control is started by holding down the On button for a few seconds, when the middle LED lights up green = The remote control is active. The remote control turns off with the Off button or automatically after a while to save battery. The buttons with arrows open and close the ceiling. The roof can also be operated with the push buttons on the electrical cabinet. There is a main switch on the back of the remote control as well as the electrical cabinet. It should always be in the "on" position, the transmitter will not drain the battery.

When opening and closing the Fliptop Slider, you must be vigilant and make sure that there is no chance of personal injuries. The electric or manually driven movements are very strong and can cause very serious damage if you get pinched or hit by the system. If your Fliptop slider has a remote control be extra careful, so that no one accidentally accesses it and maneuver when someone is near moving parts. It is also important to not open or close while driving. If you need to perform service or other work on the system, it is imperative to disconnect the power. If the system is locked with straps, do not forget to release them before operating the Fliptop Slider.

Important information
Strong winds can seriously damage the system. Therefore, tighten down the roof with straps under strong wind. It is important to be careful when loading and unloading so that the loaded material does not end up on the roof of the system. If the cargo fills the entire cargo space and tends to collapse into a coherent mass there is a risk of a vacuum forming, this can bend the arches and seriously damage your system, if this is a risk, open then the ceiling to let in air before unloading. When loading and unloading masses of heavy stone, roots or anything else that stands up, it is important that the load does not come into contact with the roof system, it prevents opening and closing of the roof. ***NOTE*** it is important to open the roof before tipping so that the load does not get stuck in the roof, because the system can be damaged then.

Safety instruction
The equipment may only be operated by personnel with sufficient knowledge of the equipment and have an understanding of the risks arising when operating the system. The minimum requirement for operating the system is a review of this documentation and a review of the equipment before any work with it starts.
For service and maintenance, electricity must be switched off so that the equipment cannot run, as there is a high clamping risk when operating the equipment.
Please note that the operator must always be careful not to cause damage to the equipment or harm to people nearby.

Performance of vehicles with Fliptop Slider
Prior to transport, make sure that the tarpaulin roof is closed or completely open. It is not permitted to drive with the roof partyly open. The roof can be damaged.

Ice and snow
Before opening or closing, snow and ice must be removed. Fliptop Slider is not designed for much snow, max 10cm when the roof is closed, when the roof is completely open, it can withstand more snow.

In strong wind
We do not recommend opening the ceiling when it blows more than 25m per second, as it can damage the system.

Maintenance
We recommend that the Fliptop Slider system be inscpected once a week when using the system continuously.
CONTROL POINTS:
- That the tarpaulin is not damaged.
- That the tarpaulin is fastened to the system
- That no bolts or rivets are missing.
- The tarpaulin is clean of debris and loads.
- That the wire is tensioned enough. If not tighten the wire.

If you find damage, it is important to repair,
Contact your nearest dealer or workshop if you have any problems.

Please note
that the roof must either be fully
open or closed when driving the vehicle.

Installation of Fliptop Slider

Fliptop Slider is delivered pre-assembled and tested by us, for easy mounting on your flatbed truck or container. All parts to be used are included. Note that it may be necessary to make some adjustments to fit your tipper truck or container as there are many different designs. It is important to fill the order form carefully for a better fit and easier assembly.

Fliptop Slider is delivered in two versions, manual opening with crank or motor operation, and there are also different closing alternatives. Manual closing with straps or Automatic rear closing with a tilt bow.There are several heights on the arches from straight to 600mm high. Standard height is 300mm. All of these parameters make the content of the delivery varies.


Example of delivery

Mounting bracket for drive beam
The brackets for the drive beam are mounted according to the accompanying instructions. Brackets mounted either with countersunk screw M8x20 or welded to the platform, it is important that they are in parallel with the platform body side.

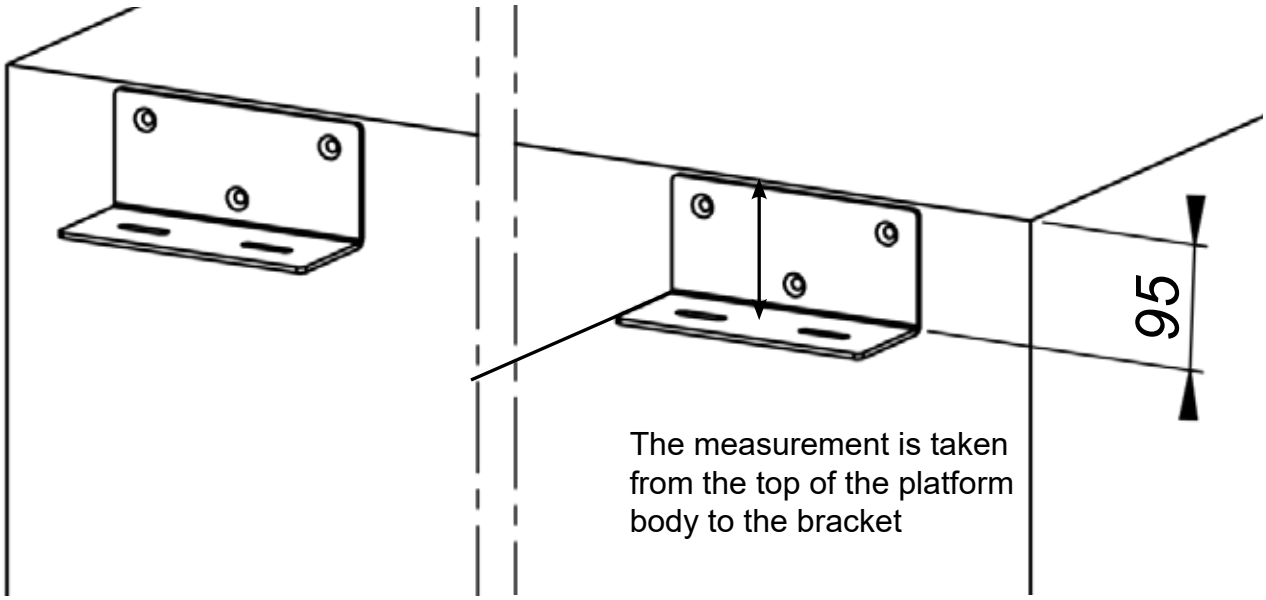

Mounting drive beam

Lift the entire package up on the platform body top, remove the packaging from the Slider system and release the wire so that the drive beam can be lifted down and placed on the drive beam brackets, without loosening the wire locks on the wire.

Center the drive beam

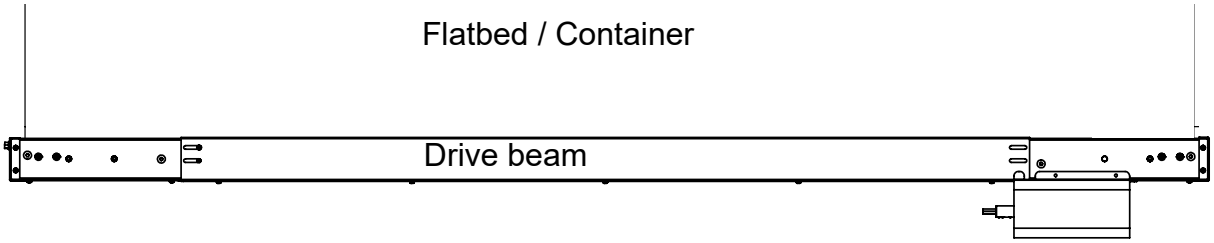

The drive beam is screwed in with two bolts on each side. 4 X M8X20 and 4 X BRB 8.5x40x3.

Mounting of the wire wheels
The position of the wire wheels is determined when ordering the Fliptop Slider. It comes with an instruction where to place the wire wheel to order. The bracket for the wire wheels should be attached CC 40mm from top edge of the platform body to the holes in the bracket, then the wire will end up 3mm below the top edge of the platform body.

If your system does not have automatic rear closing, follow the mounting instructions but ignore the instructions for the chain and tilt arch, in the automatic rear closing solution.

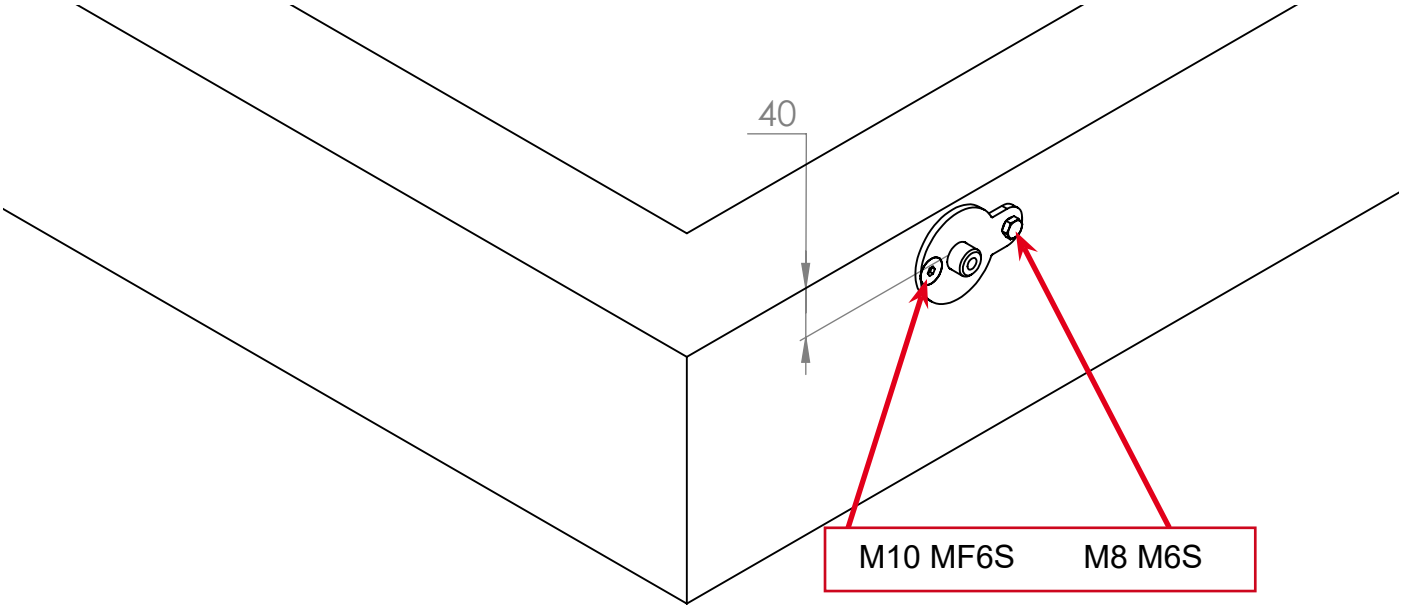

Example wire wheels without automatic rear closing

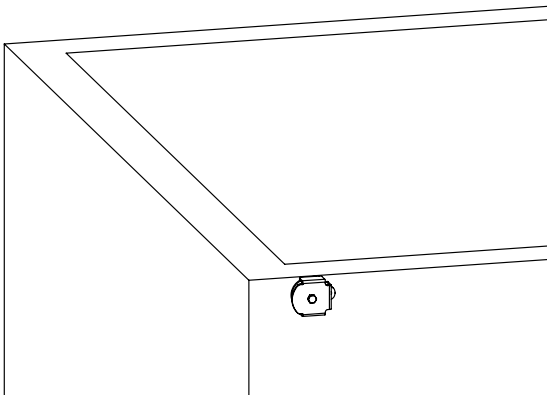

Example wire wheels with automatic rear closing

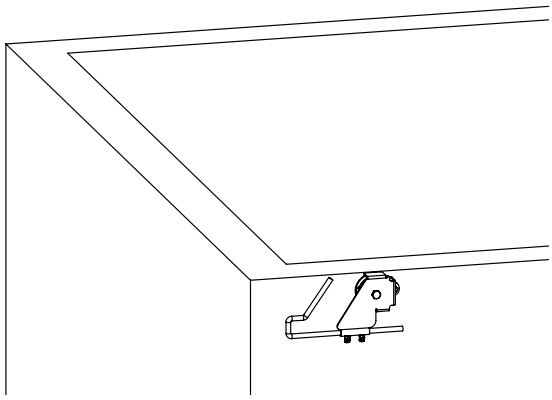

Mounting of the wire

1

Thread the wire around the wire wheel.

2

Place the two washers between the cover and wire wheel. Thread through the bolt.

3

Place the wire wheel with the wire in cover.

4

Screw the cover and the wire wheel into the bracket, make sure the wire is not tangled together.

Tensioning off the wire

Loosen the bolts to the wire holder on the end arch on both sides so that the wire goes freely through the system.

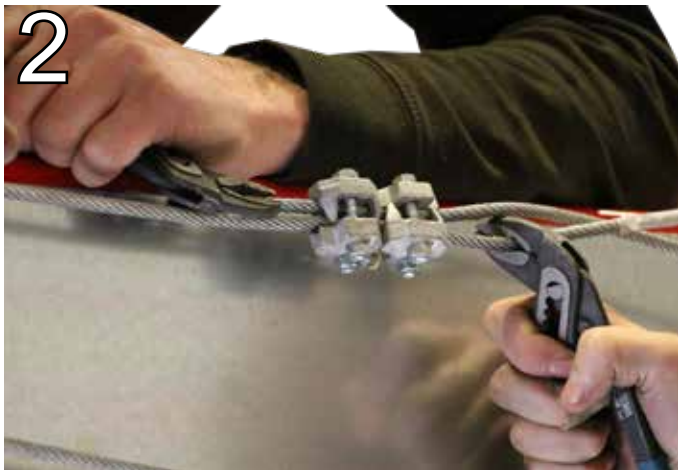

Loosen the two wire locks around the wire and tighten it firmly.

Tighten the wire by pulling at both ends of the wire with maximum manual power.

Screw the two wire locks around the wire as in the picture, while you tighten it.

Tighten the wire with the built-in wire tensioner on the drive beam. NOTE! Do not span the wire. Appropriate tension is reached when the wire hangs down approx. 20-30mm on a 6 meter system.(Post-tensioning may be needed)

End position adjustment

Tighten the Slider system with the help of manual power so that the end arch ends up close to its final position, but without the tilt arc with automatic closing closes.

It is important that the wire locks come as close to the end arch as possible, see picture above.

Check that the Fliptop Slider stands straight by measuring on both sides of the end arch to the desired end position.

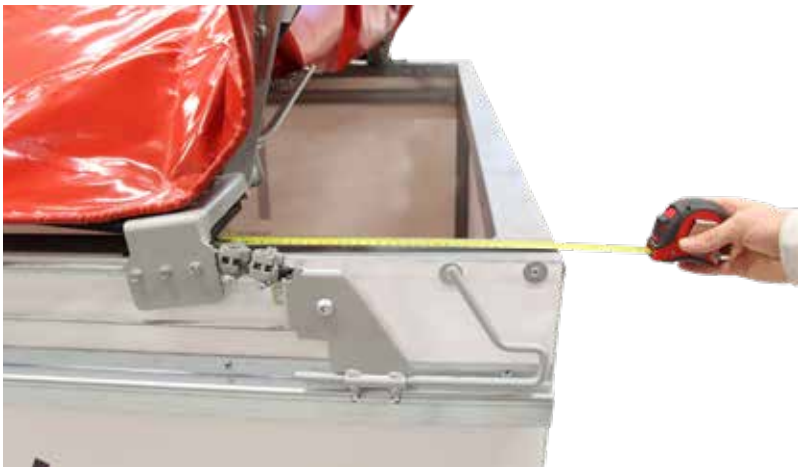

This is a good example of a good positioning of the wire locks against the end arch adjacent to the wire wheel.

Screw the end arch into the wire bracket on both sides of the end arch. *It is important that the wire ends in the grooves in the wire holder.*

Drive unit

MANUAL

Fit the lock to the crank, then fasten the crank, or alternatively cut it to the desired length and tighten the stop screws.

ELECTRICAL

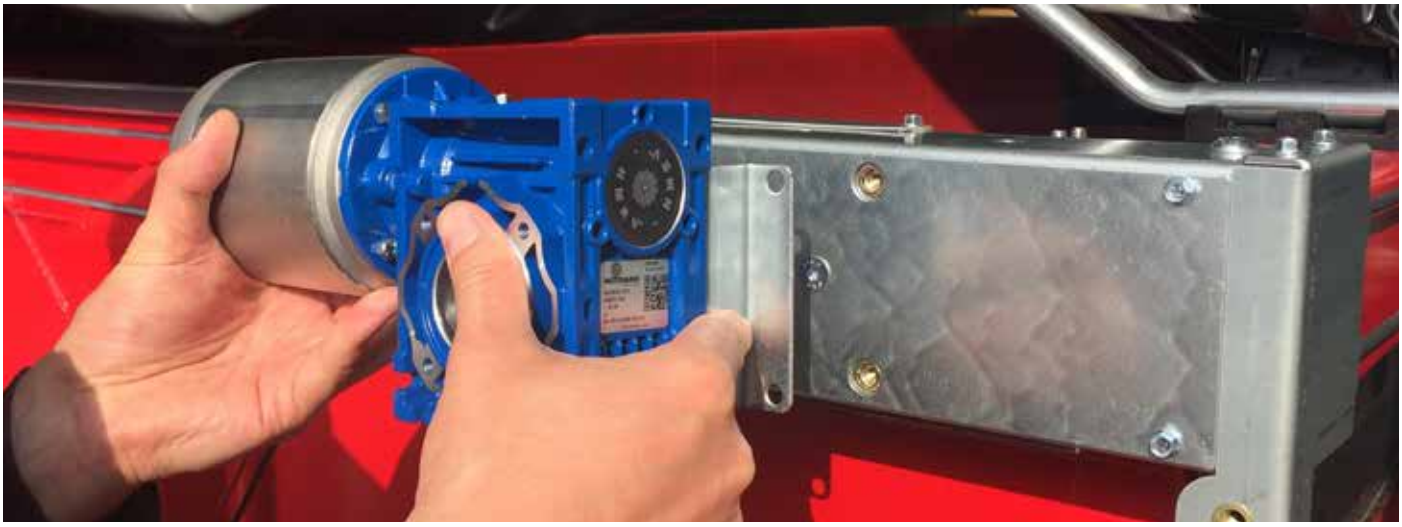

The electric motor is mounted on the drive beam with 4 X M8X20 and 4 X M8 BRB with the motor facing the center.
We recommend lubricating the shaft with grease before mounting.
The shaft with wedges are packed separately.

Fit the engine cover. When mounting, the motor protective cover must be clamped between the aluminum strip and the drive beam bracket.

Adjustment of automatic rear closing

For the automatic closing to work well, the springs may need to be adjusted. The springs that lift up the tilt arch with automatic closing should be as weak as possible. The force should only just be able to lift up the tilt arch of the automatic rear closing. There are many possibilities to adjust the springs.

The spring can be repositioned to reduce or increase the force.

The spring must be adjusted so that the automatic rear closing knocks down where the wire wheel ends.

If the automatic rear closing goes down too soon, extend the chain between the spring and the rocker. If the back end of the automatic rear closing goes down too late, shorten the chain between the spring and the back end.

NOTE. It is important not to have the chain and springs too tight, as they tend to reverse the Slider system.

When the back end of the automatic rear closing closes softly, it will look like this.

When the automatic rear closing is adjusted correctly, the s-hooks should be pinched.

Adjustment of stop arm

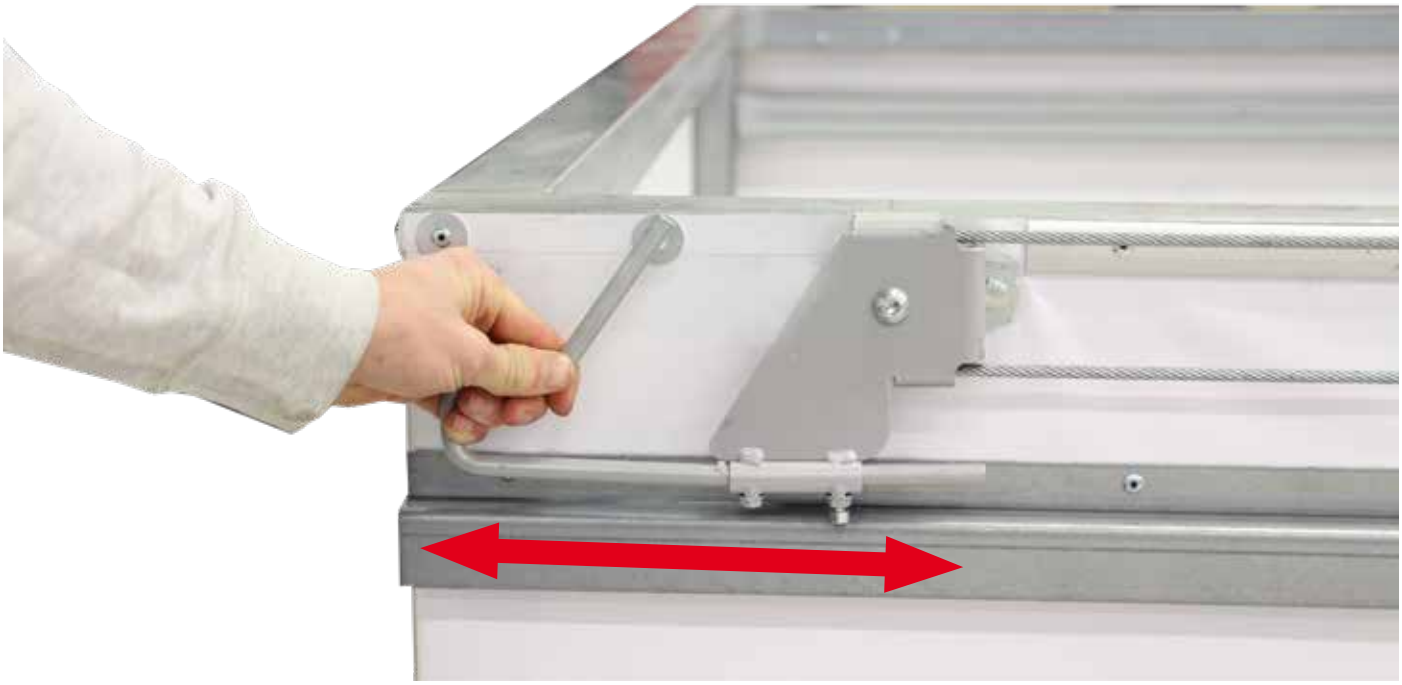

Adjust where to put the stop arm, it should be a gap of approx. 5CM.

Wire cutting

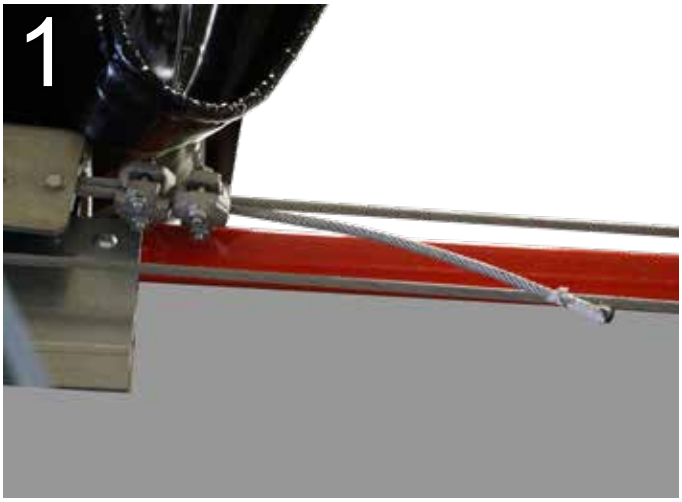

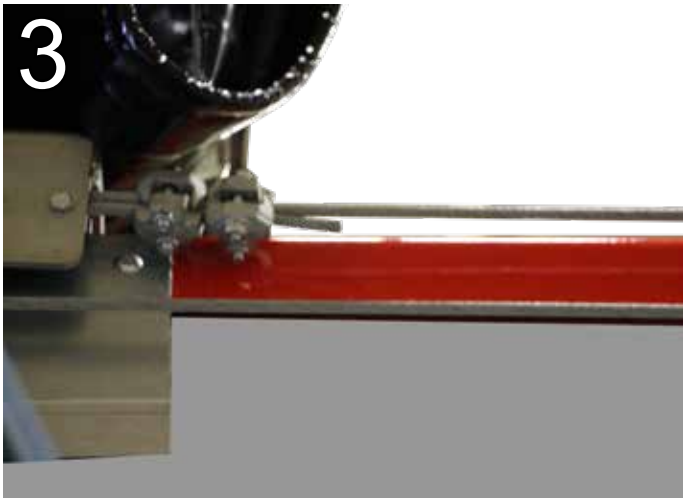

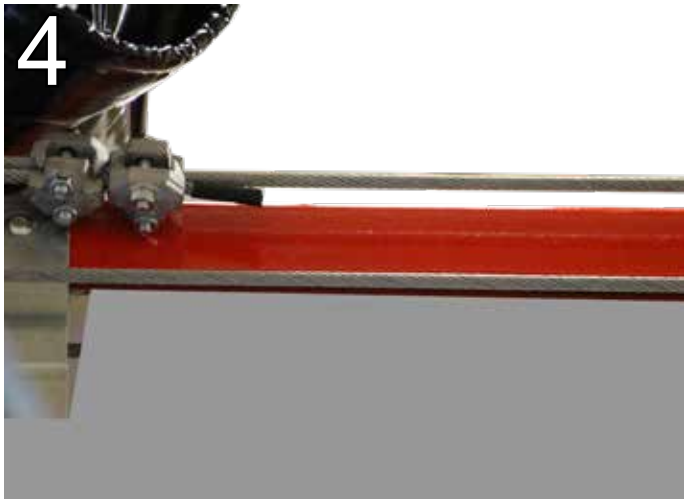

Cut the excessive wire 3 centimeters from both sides of the wire lock, seal the ends of the wire with a shrink tube to prevent the wire from threading up.

Mounting option on drive beam
There are many solutions for mounting the Fliptop Slider if it is crowded on the front beam, the wire can be redirected with the help of wire wheels.

Post tensioning of wire
If the wire starts to slip when opening, closing or if the wire is hanging down the sides in the open position, the wire should be tightened.

When tensioning the wire, the roof must be half-open, fold up the tarpaulin on the opposite side to the drive. Use a 13mm wrench to tighten the wire, then test the function.

Tighten the wire with the built-in wire tensioner on the drive beam. *NOTE! Do not span the wire.*
Appropriate tension is if the wire hangs down approx. 20-30mm on a 6 meter system.

Wind protection Z-profile

The Z-profile is mounted in line with the drive beam and should end 100mm after the last wind hook. ***NOTE!*** joints between the z-profiles must be inspected so that there is no gap between them.

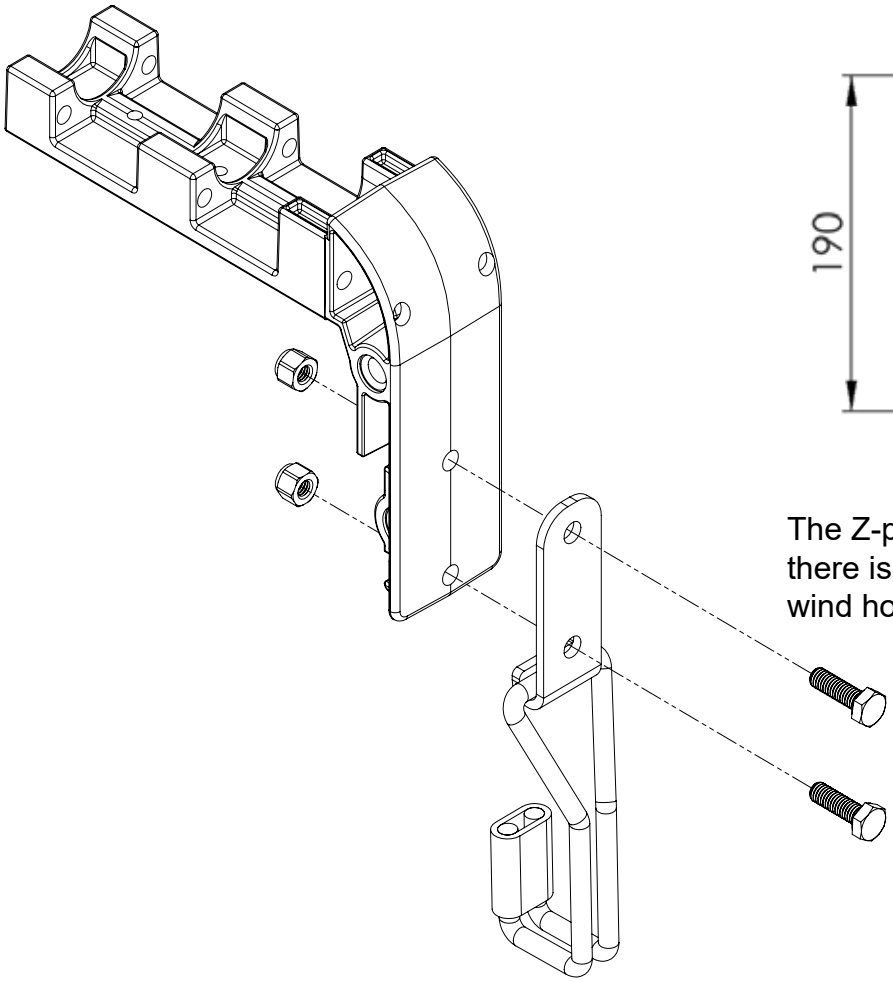

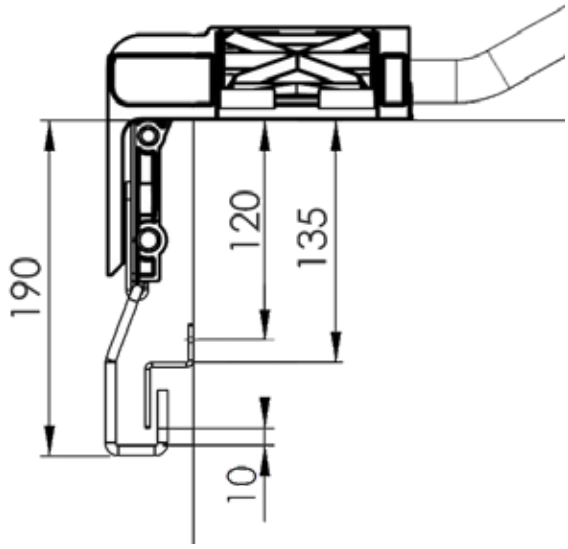

The Z-profile should be mounted so that there is 10mm clearance between the wind hook and the z-profile.

Place locking nuts in the grooves on the arches, screw the wind hook with the supplied bolt.

Bodys or containers of 5-6m use 2-3 wind hooks on each side. Longer systems use 3-6 wind hooks on each side.

Wind protection Exterior
This solution is based on wind hooks at different heights like hooks in brackets.

Maximum of 4 per side.

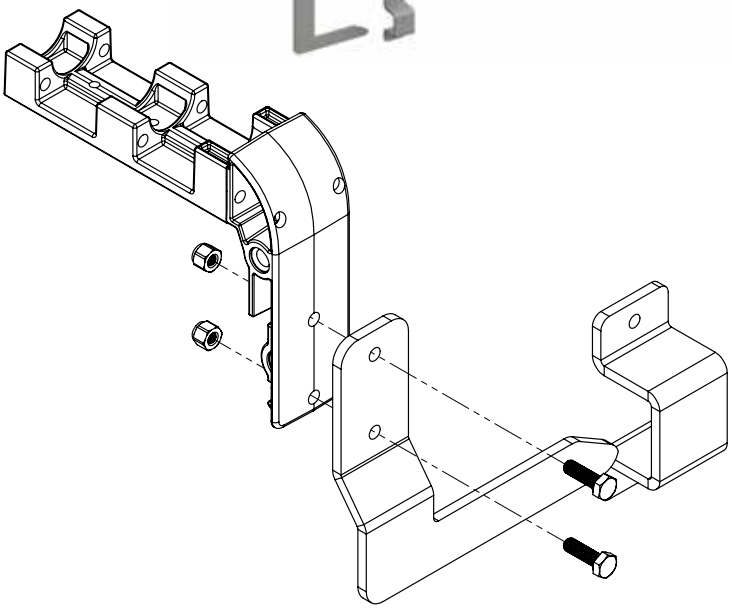

Place locking nuts in the grooves on the arches, screw the wind hook with the supplied bolt.

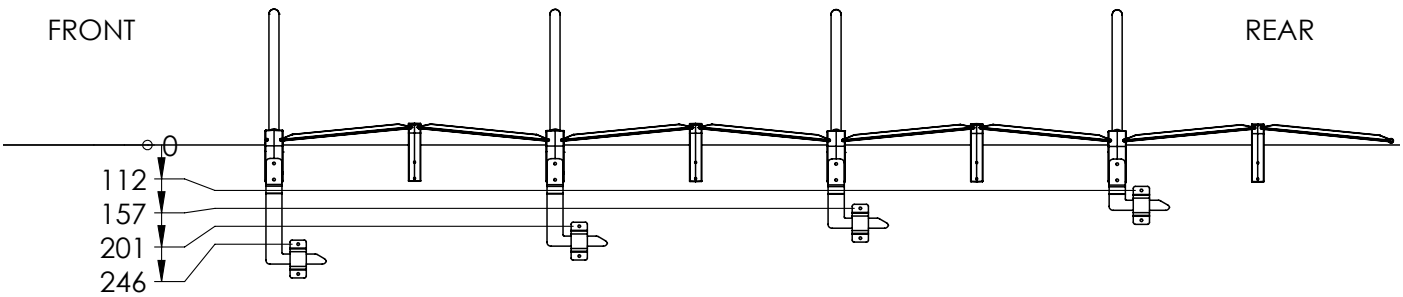

The dimensions are taken from the edge of the body and measured to the center of the first mounting hole on the bracket.

Bodys or containers of 5-6m use two wind hooks on each side. Longer systems use 3-4 wind hooks on each side.

Wind protection Inside
This solution is based on wind hooks that are screwed into the arches, when the roof is closed, the wind hooks pass under the plates that are welded to the body edge.

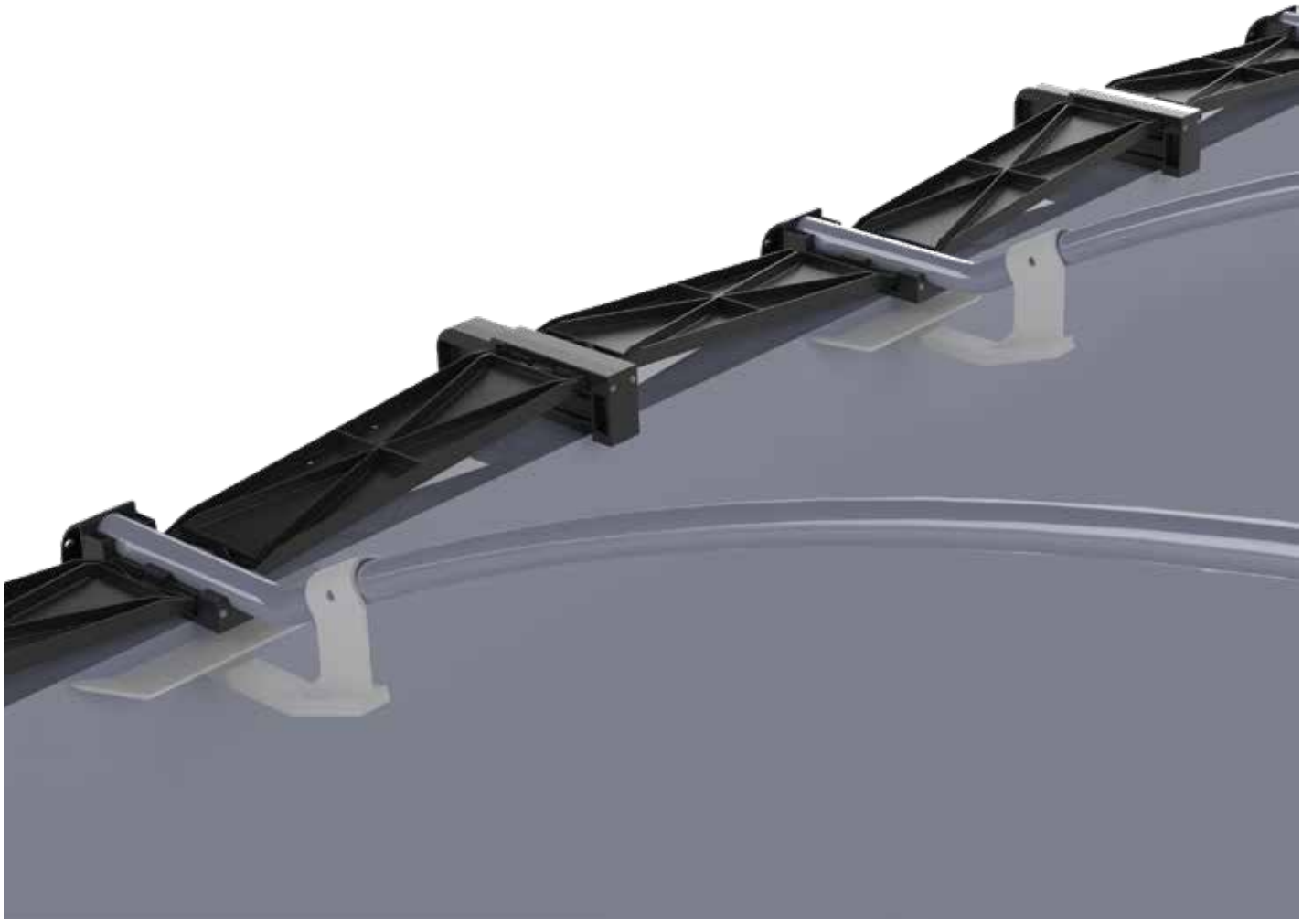

Bodys or containers of 5-6m use two wind hooks on each side. Longer systems use 3-4 wind hooks on each side.

ELECTRICAL SCHEME

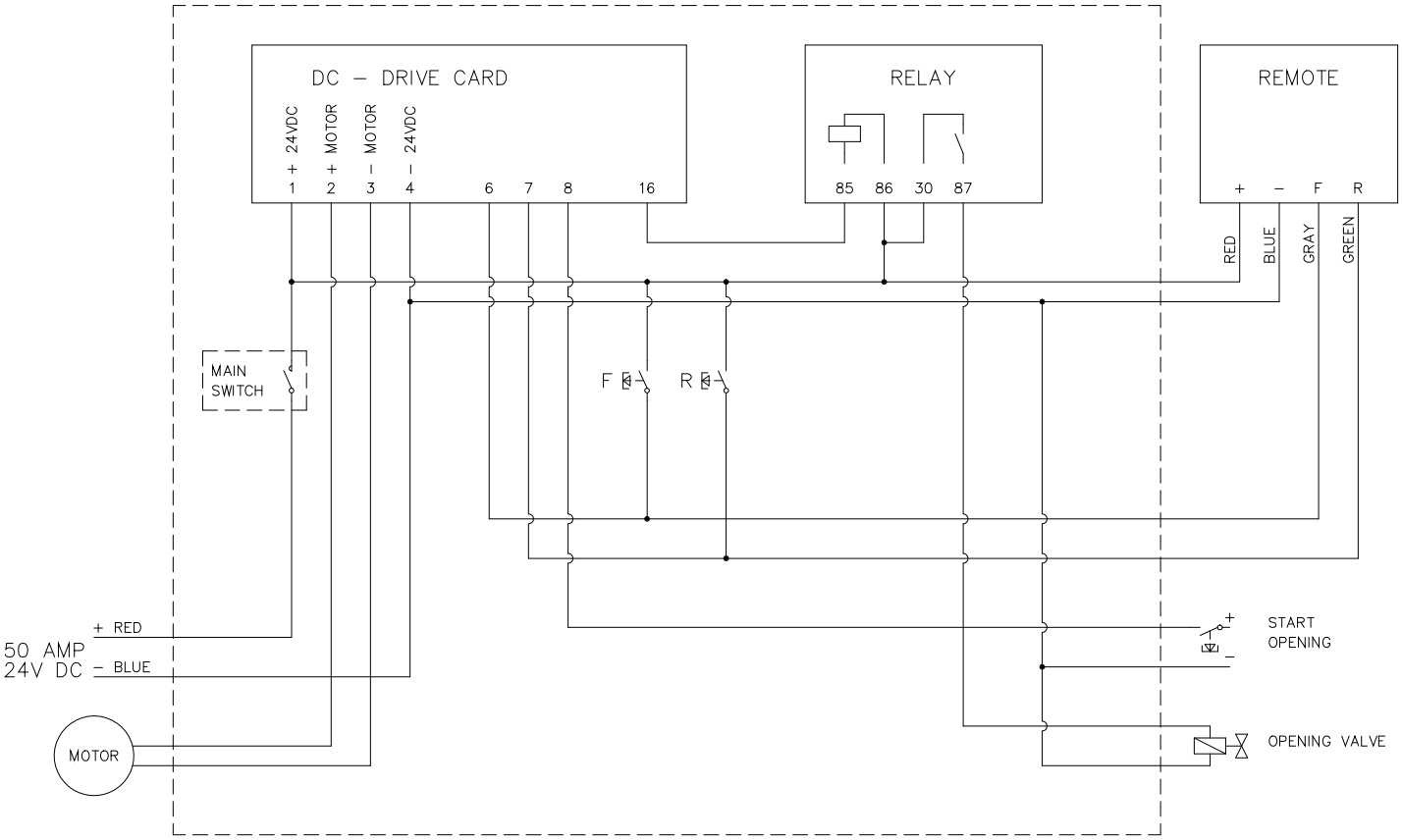

When installing a time relay, the signal from the back door or tilt sensor should be connected to port 8 with 24V, this starts and opens the slider system for 5 seconds.
Thereafter, 24V can be taken from relay pin 87 if needed. For example. if a hydraulic valve is to be operated. See diagram above and picture below.

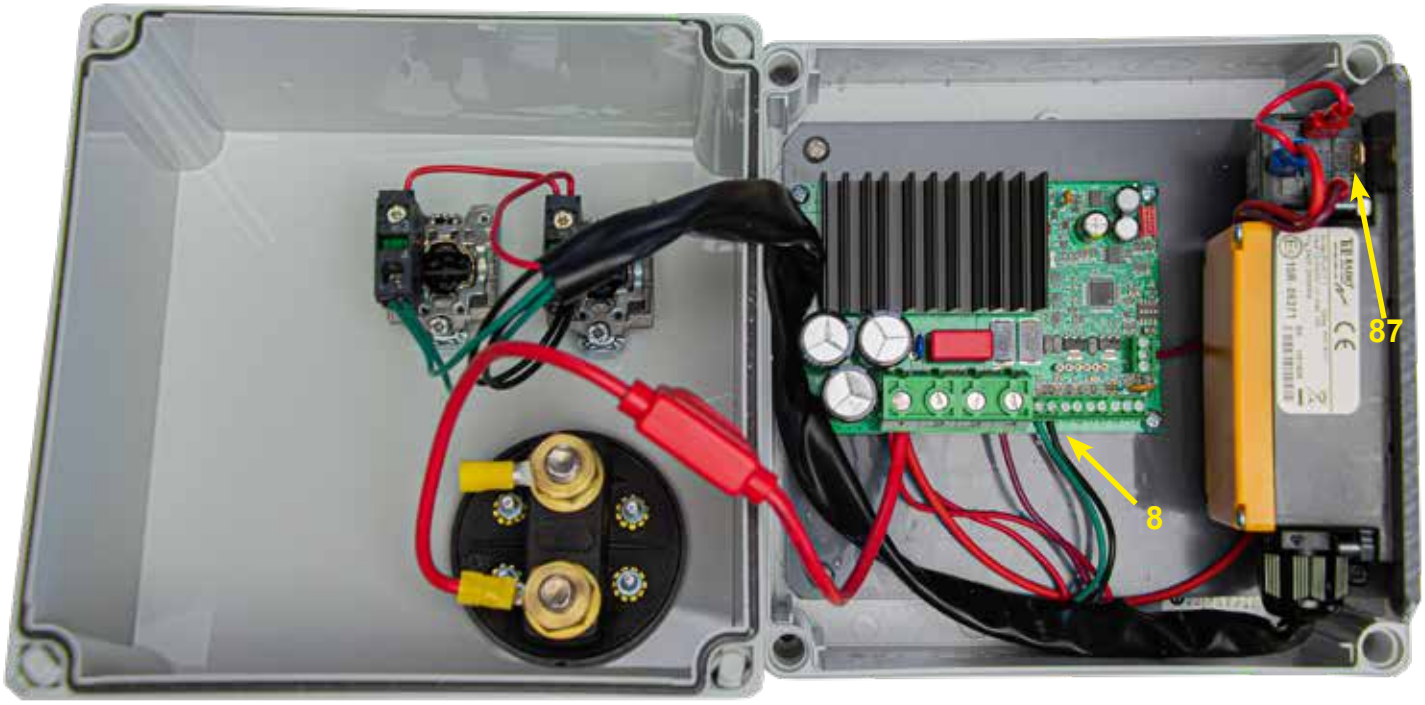

NOTE! For long installations (4m upwards) 16mm2 cable should be used, this we can provide.
For short installations (up to 4m) you can use 4-6mm2 cable, these cables can also be offered.

Replacement of fuse 40A

To replace the fuse, open the electrical box, this is done with a screwdriver. Then loosen the cover carefully and replace the fuse. 40A.

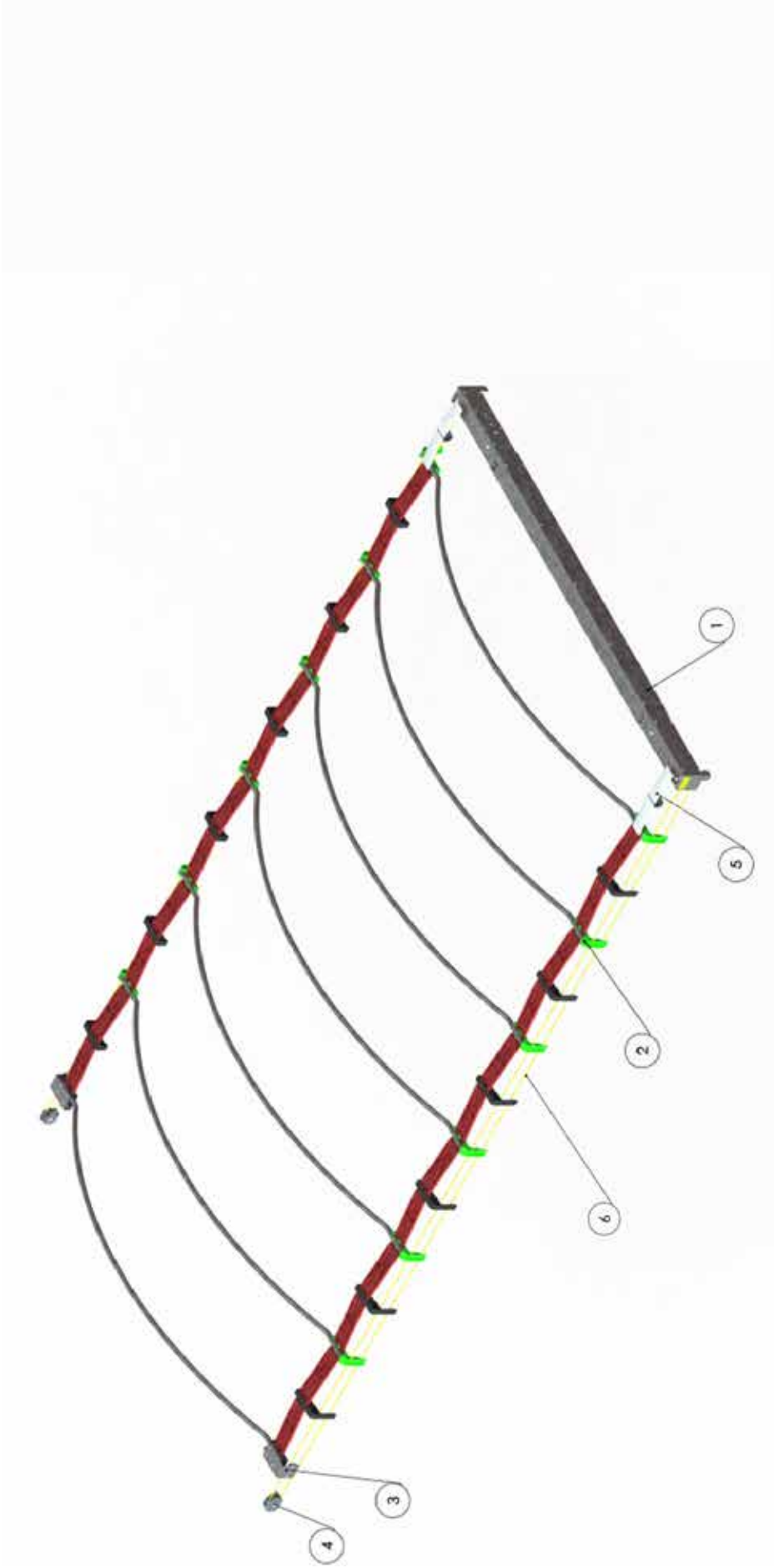

Det.nr	Ant.	Benämning	Material	Dimension	Art.nr
6	4	Wire 6mm	Material <not specified>		802-018
5	2	Plastic strap in front Slider	Material <not specified>		802-114
4	2	Rear wires wheel standard	Material <not specified>		802-109
3	1	Endbow	Material <not specified>		802-019
2	6	Bow mounted	Material <not specified>		802-040
1	1	DriveBeam Slider	Material <not specified>		802-017

Konstr. AC | Ritad | Format A3 | Tolerans där annat ej anges ISO 2768-C | Godk. | Skala 1:20 | Ytjämnhet ~ | Vikt 371.4 kg
Ytbehandling | Dat.
Fliptop www.fliptop.se
FliptopSlider Whitout Drive
Ritn.nr 802-001 | Revision

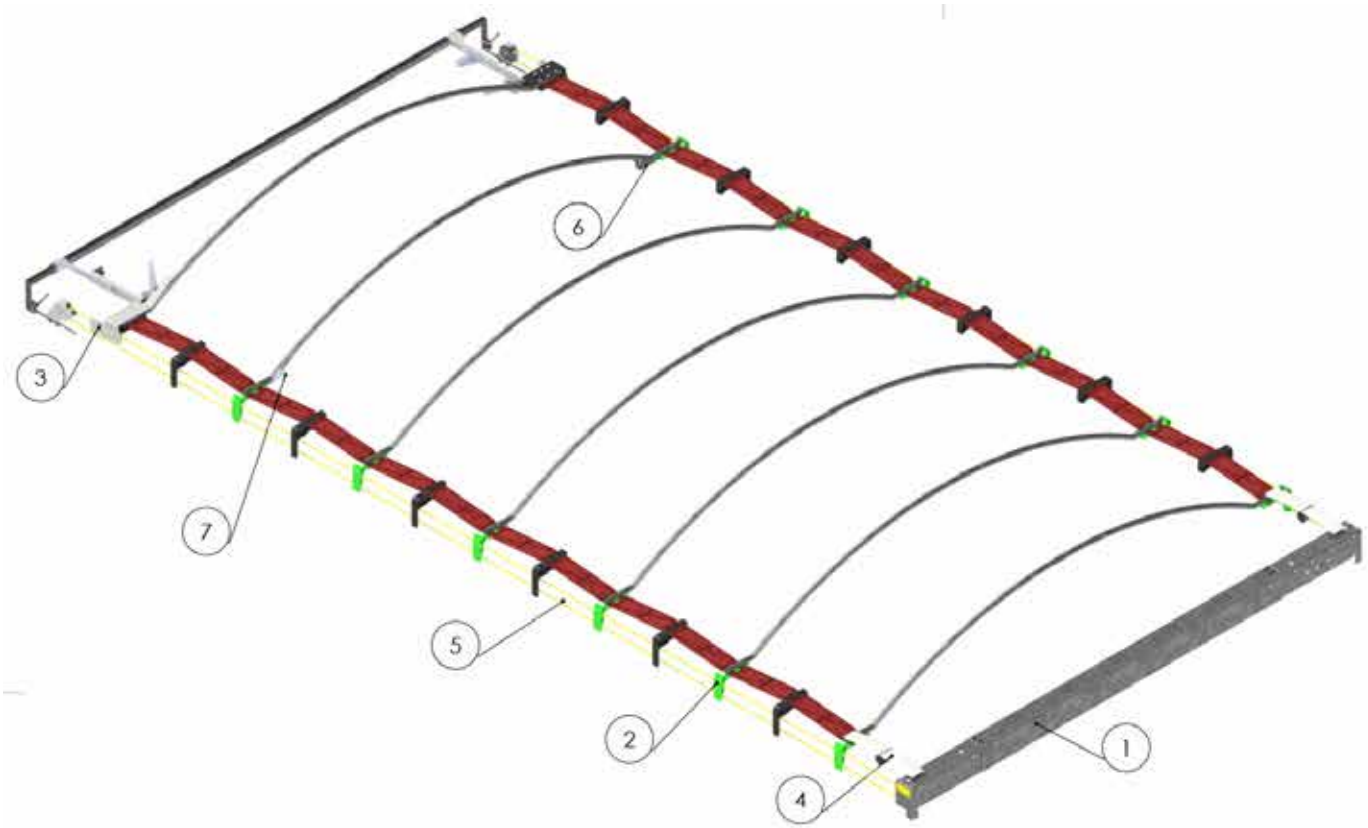

Det.nr	Ant.	Benämning	Material	Dimension	Art.nr
7	1	Bracket for spring L	1.0037 (S235JR)	T=3mm	802-469.L
6	1	Bracket for spring R	1.0037 (S235JR)	T=3mm	802-469
5	4	Wire 6mm	Material <not specified>		802-018
4	2	Plastic strap in front Slider	Material <not specified>		802-114
3	1	Automatic Closing	Material <not specified>		802-025
2	6	Bow mounted	Material <not specified>		802-040
1	1	DriveBeam Slider	Material <not specified>		802-017

Konstr.	Ritad	Format	Tolerans där annat ej anges	Godk.	Skala	Ytjämnhet	Vikt
AC	AC	A3	ISO 2768-C	RJ	1:20	~	383.3 kg

Fliptop® www.fliptop.se

FliptopSlider Whitout Drive with automatic closing

Ytbehandling

Dat. 2020-05-27

Ritn.nr 802-001 + 025

Revision

Fliptop® www.fliptop.se

Sparepartslist

802-025H

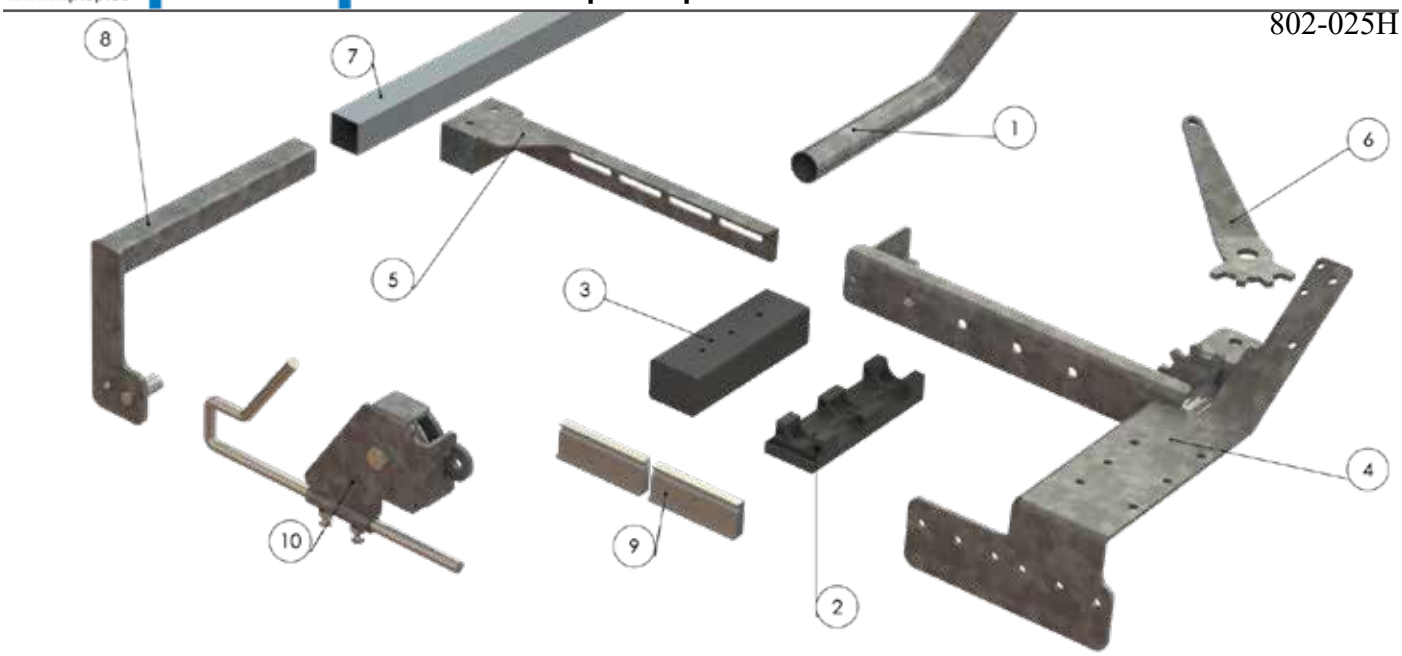

Part.no	Qty.	Name	Article.no	6	1	Gear arm R	802-394
1	1	Arc 300 Slider	802-405	7	1	Tube Alu. 30x30	802-338
2	1	End bracket Lift plate	802-259	8	1	Tarp holder R	802-251H
3	1	Sliding Block	802-348	9	2	Wire holder	802-250
4	1	Rear Lifting part R	802-043 H	10	1	Rear wire wheel standard R	802-110-1H
5	1	Extension lift arm R	802-384-1H				

802-025V

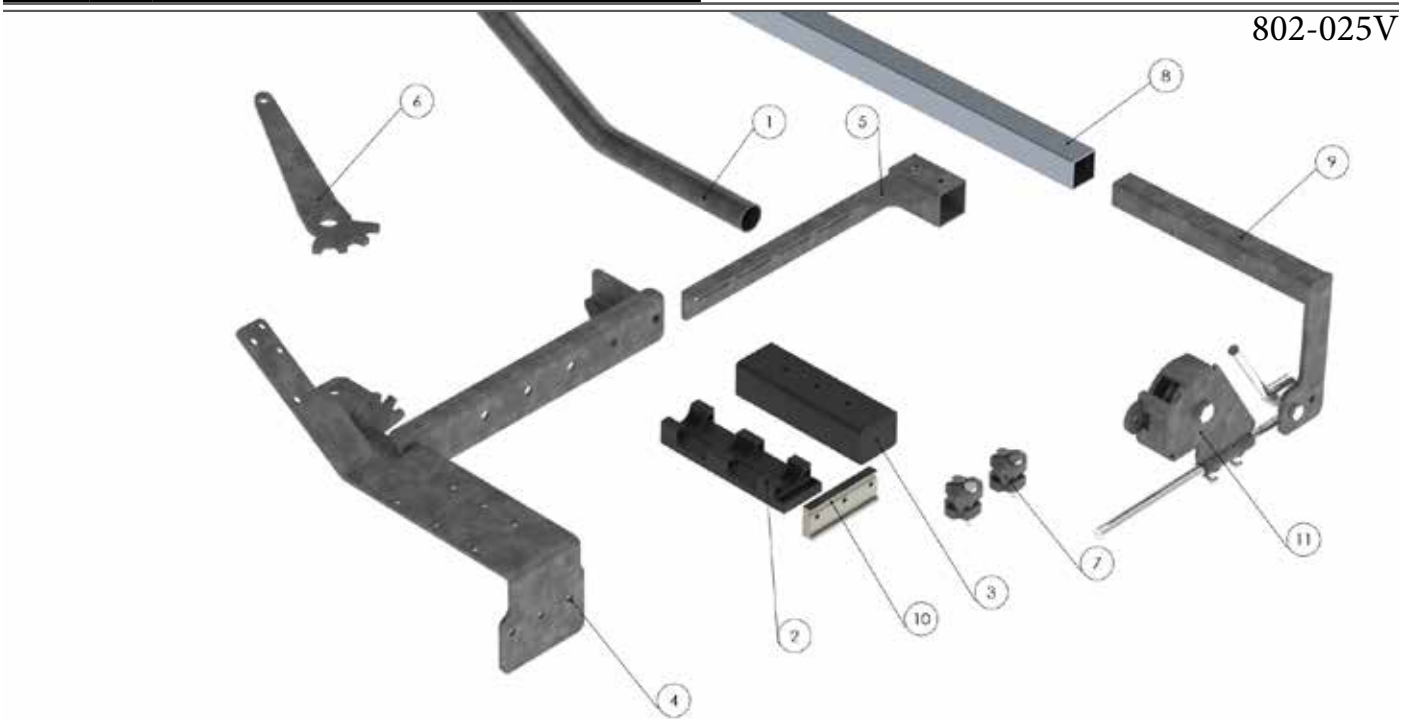

Part.no	Qty.	Name	Article.no	6	1	Gear arm L	802-394-M
1	1	Arc 300 Slider	802-405	7	2	Wirelock	BG-600
2	1	End bracket Lift plate	802-259	8	1	Tube Alu. 30x30	802-338
3	1	Sliding Block	802-348	9	1	Tarp holder L	802-251V
4	1	Rear Lifting part L	802-043 V	10	1	Wire holder	802-250
5	1	Extension lift arm, left	802-384-1V	11	1	Rear wire wheel standard L	802-110-1V

802-110-1H

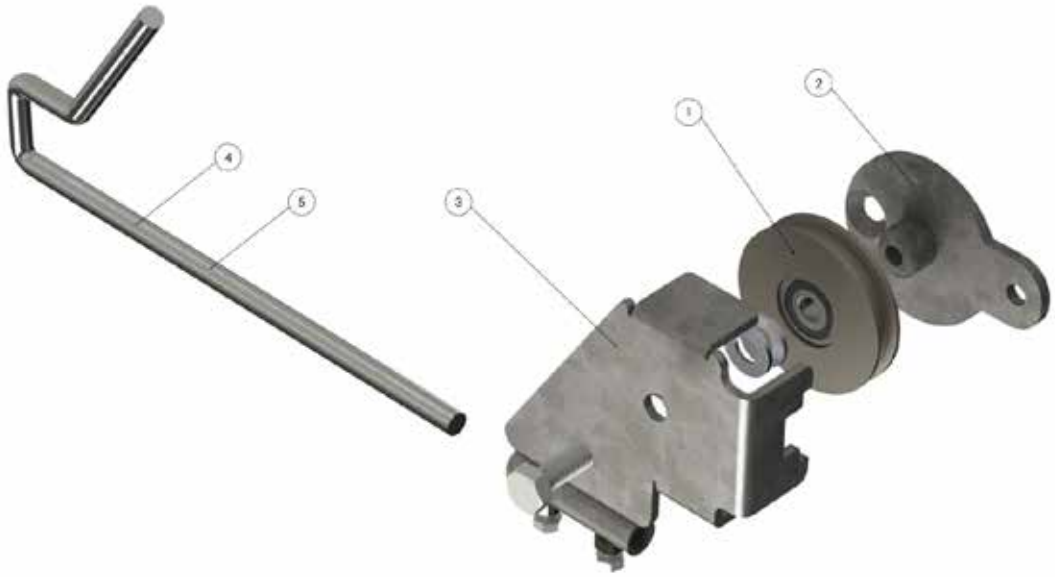

Part.no	Qty.	Name	Art.no
1	1	Wire wheel and ball bearings	802-341
2	1	Wire wheel bracket	802-333
3	1	Protective plate wire wheel H	802-032-1H
4	1	Stop-bracket 255	802-398-1-A
5	1	Stop-bracket 405	802-398-2-A

802-110-1V

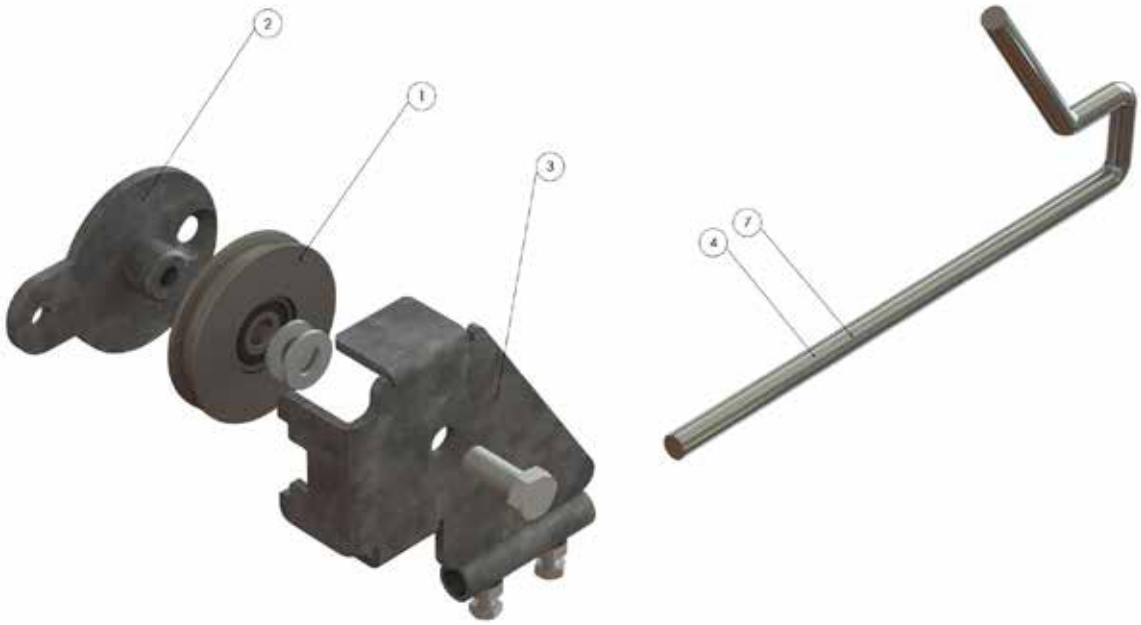

Part.no	Qty.	Name	Art.no
1	1	Wire wheel and ball bearings	802-341
2	1	Wire wheel bracket	802-333
3	1	Protective plate wire wheel L	802-032-1V
4	1	Stop-bracket 255	802-398-1-A
5	1	Stop-bracket 405	802-398-2-A

802-109

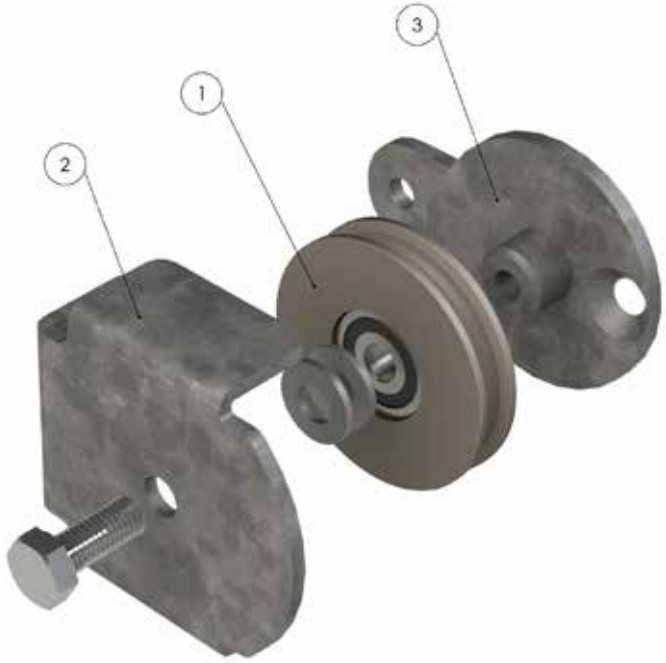

Part.no	Qty.	Name	Art.no
1	1	Wire wheel and ball bearings	802-341
2	1	Wire cover	802-391A
3	1	Wire wheel bracket	802-333

802-040

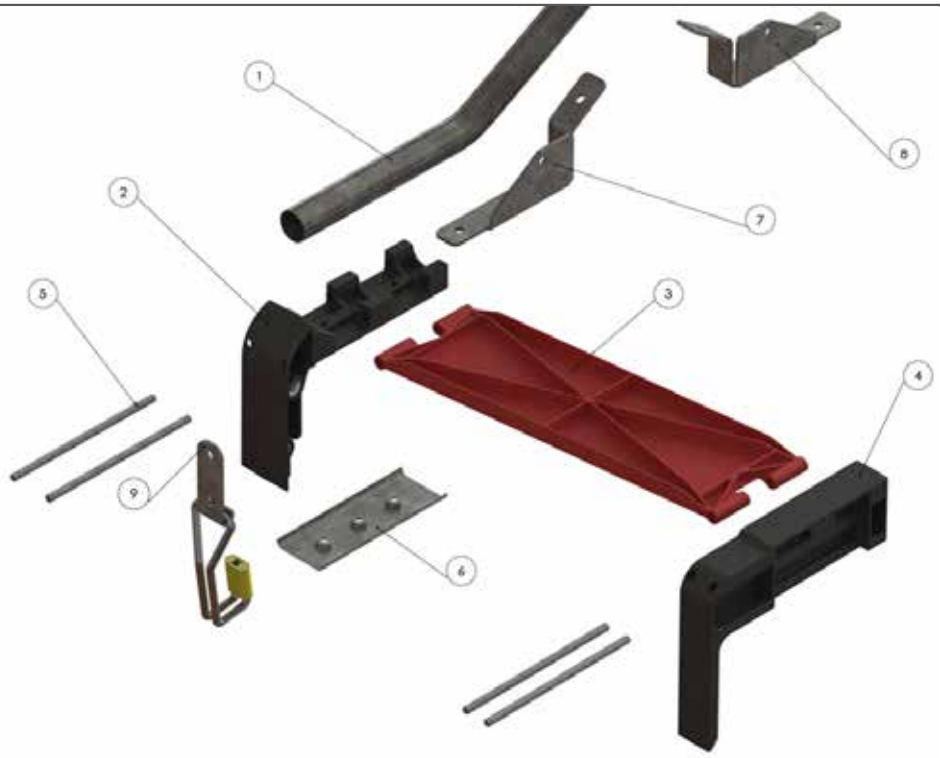

Part.no	Qty.	Name	Article.no	5	4	Axle to folding plates	802-243
1	1	Arc 300 Slider	802-405	6	1	Steel slide plate	802-465
2	1	Sliding plate with bushing	802-021	7	1	Bracket for spring L	802-469.L
3	1	Folding plates	802-240	8	1	Bracket for spring R	802-469
4	1	Intermediate piece	802-241	9	1	Windhook	802-024

802-017

Part.no	Qty.	Name	Art.no				
1	1	Tension side assembly	802-008-1	5	1	Drive beam 1810	802-360
2	1	Drive side assembly	802-009	6	1	Frontshield 1810	802-361
3	1	Drive beam 1750	802-362	7	1	Drive beam 1870	802-351
4	1	Frontshield 1750	802-363	8	1	Frontshield large 1870	802-353
				9	2	Mounting bracket	802-231

802-009A

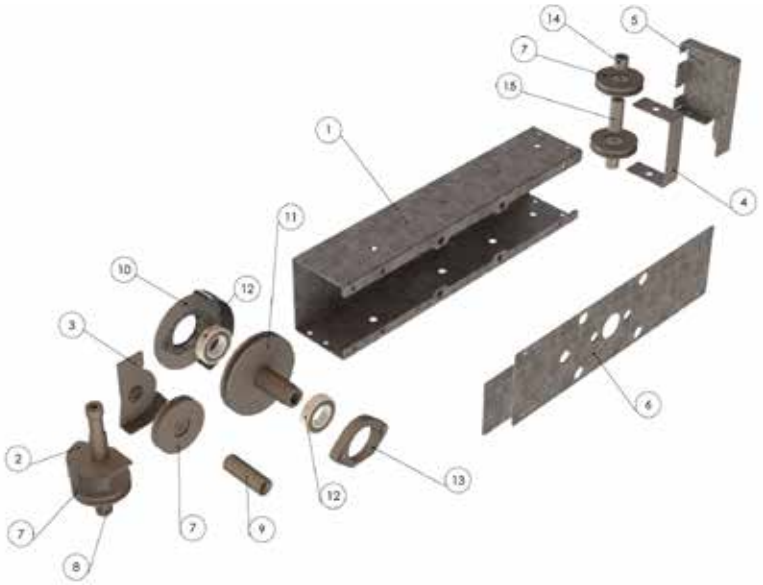

Part.no	Qty.	Name	Art.no				
1	1	Box drive	802-379	8	1	Axis 02	802-209
2	1	Wire stop turnwheel	802-106	9	1	Axis 23	802-223
3	1	Wire protection drive	802-329	10	1	Wire protection drive wheel	802-328
4	1	Wire stop	802-216	11	1	Drive wheel with shaft	802-327
5	1	Side cover for drive side	802-230	12	2	Ball Bearing	6005ZZ
6	1	Front for drive side	802-229	13	1	Bearing holder	802-221
7	4	Wire wheel and ball bearings	802-341	14	2	Axel 01	802-207
				15	1	Axel 06	802-208

802-008-1A

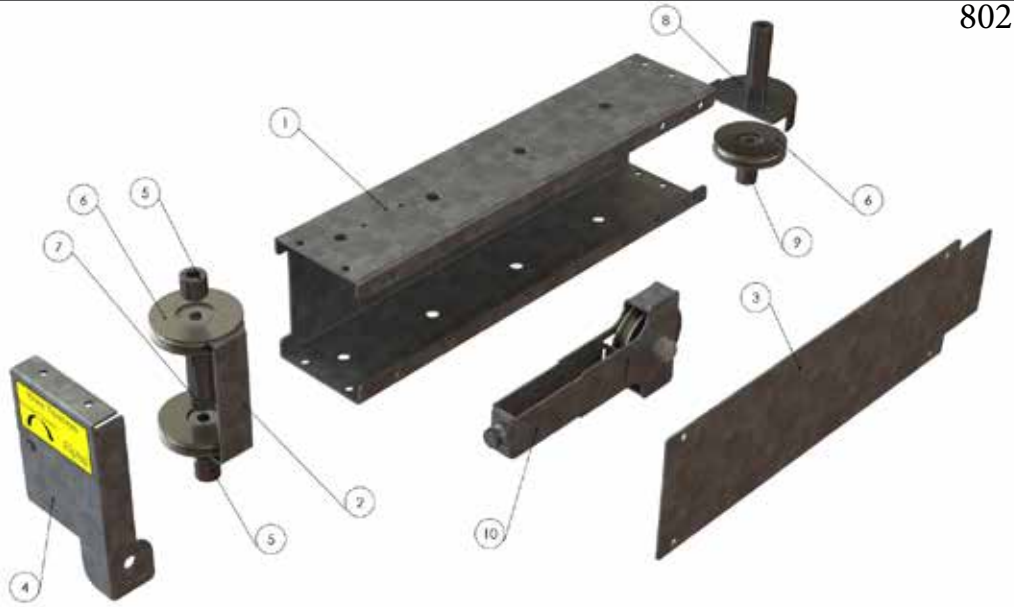

Part.no	Qty.	Name	Art.no	6	3	Wire wheel and ball bearings	802-341
1	1	Box tension	802-378-1	7	1	Axel 06	802-208-1
2	1	Wire stop	802-216	8	1	Turn wheel for tension side	802-324
3	1	Front for tension side	802-213	9	1	Axis 02	802-209
4	1	Side cover for tension side	802-215-1	10	1	Tensioner assembled	802-101-1A
5	2	Axel 01	802-207				

802-029

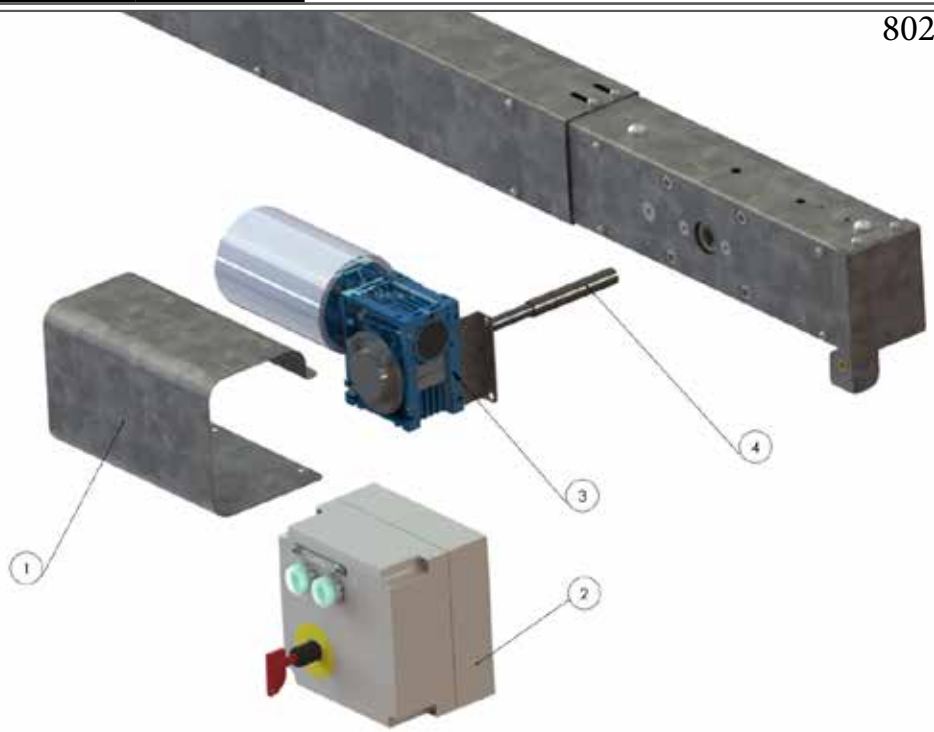

Part.no	Qty.	Name	Art.no
1	1	Engine Cover	802-270
2	1	Electric box	802-022
3	1	Engine Assembly	802-015
4	1	Engine Axle	802-271

802-015

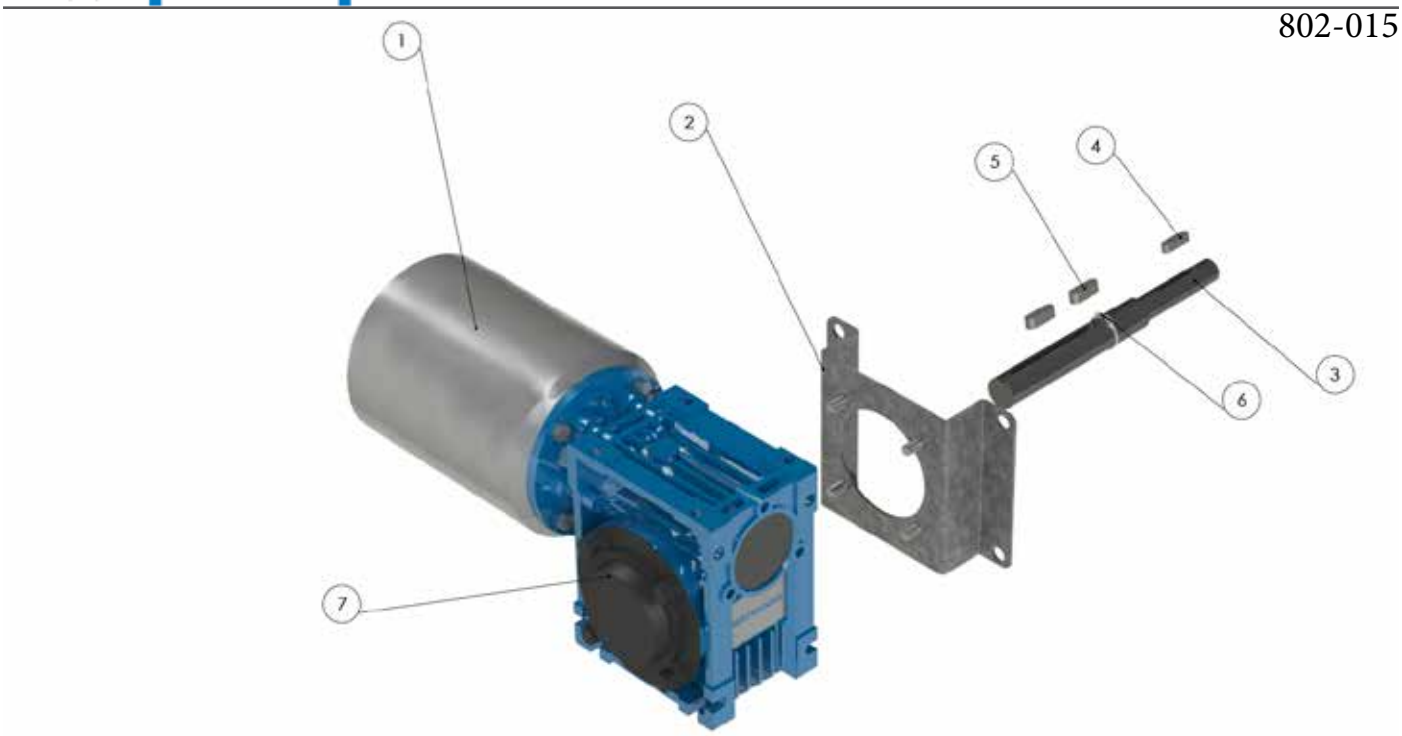

Part.no	Qty.	Name	Art.no	4	1	Wedge 5x5x20	SMS 2306 5x5x20
1	1	Engine Assembly	802-015	5	2	Wedge 6x6x20	SMS 2306 6x6x20
2	1	Engine Bracket	802-268	6	1	Circlips	471217
3	1	Engine axle slider	802-271	7	1	Plastic Lid Gear	3016735

802-020

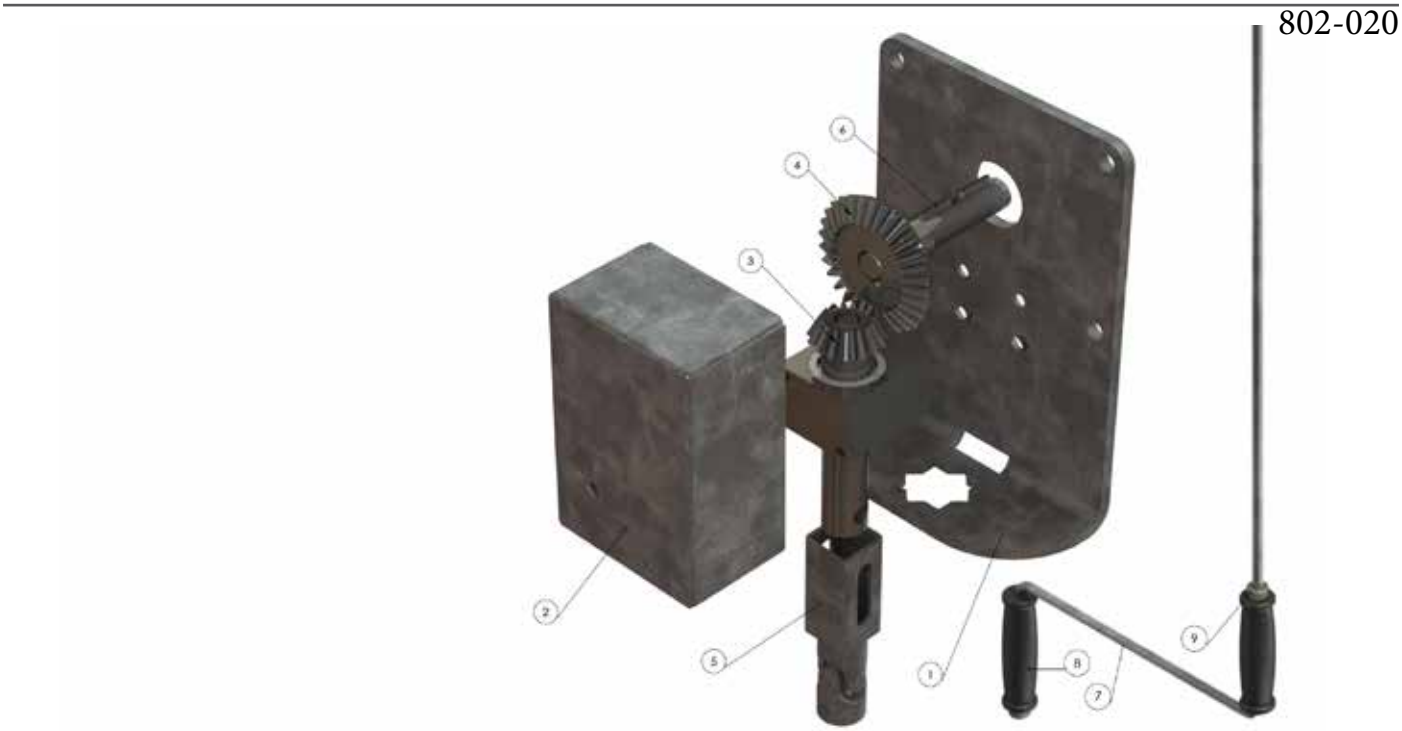

Part.no	Qty.	Name	Article.no	5	1	CV joint + Attachment	802-335
1	1	Backplate slider manual	802-285	6	2	Wedge 5x5x20	SMS 2306 5x5x20
2	1	Box manual slider	802-289	7	1	Manual Crank	802-262
3	1	Gear Holder 1	802-337	8	2	Handle Lock	233-152
4	1	Axel crank 2+ gear	802-336	9	2	Ackurat Handle	KGUH00211

Wind Secure Systems

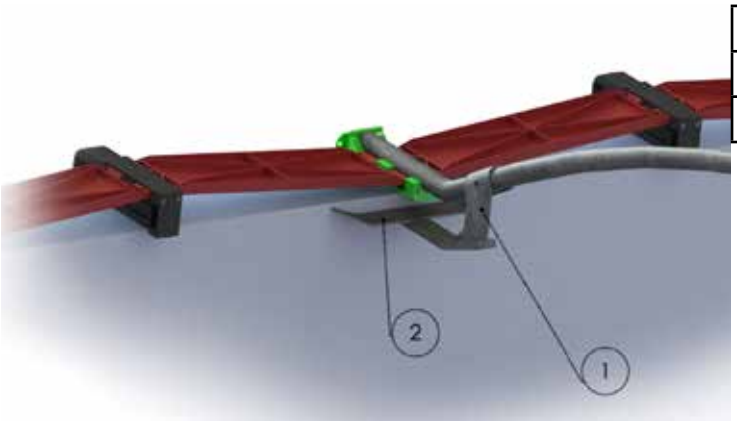

Part.no	Qty.	Name	Art.no
1	1	Windhook Inside	802-347
2	1	Stopp windhook inside	802-358

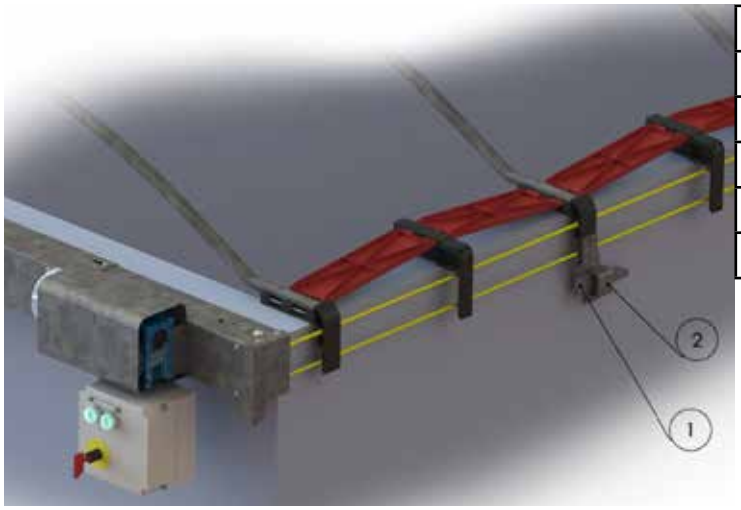

Part.no	Qty.	Name	Art.no
1	1	Windhook 1	802-276H&V
1	1	Windhook 2	802-273H&V
1	1	Windhook 3	802-274H&V
1	1	Windhook 4	802-275H&V
2	1	Bracket	802-277

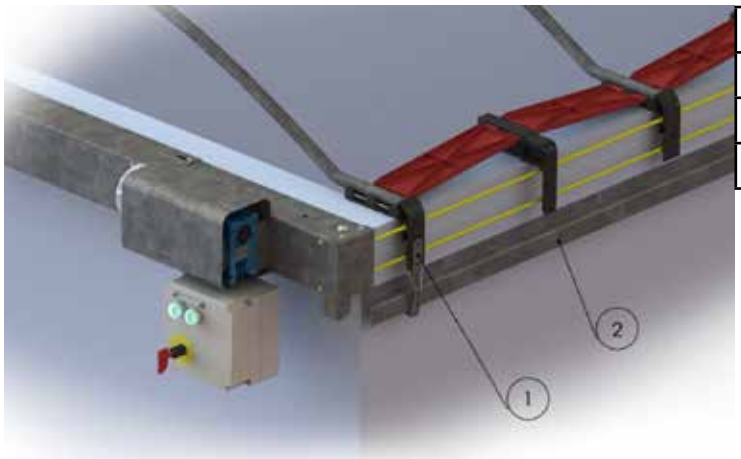

Part.no	Qty.	Name	Art.no
1	1	Windhook	802-024
2	1	Z-Profile Low	802-366
2	1	Z-Profile High	802-381

CE-DECLARATION

Manufacturer:

MÅLERÅS MEKANISKA AB
INDUSTRIGATAN 1
380 42 MÅLERÅS
SWEDEN

Hereby declare that the following equipment:

Fliptop Slider
Nr: 802-001/002/003

Is made in accordance with regulations of the European Machinery Directive 2006/42/EG

MÅLERÅS MEKANISKA AB
INDUSTRIGATAN 1
380 42 MÅLERÅS
SWEDEN
Tel. 0481-31444

2020-08-05

Björn Johansson / VD